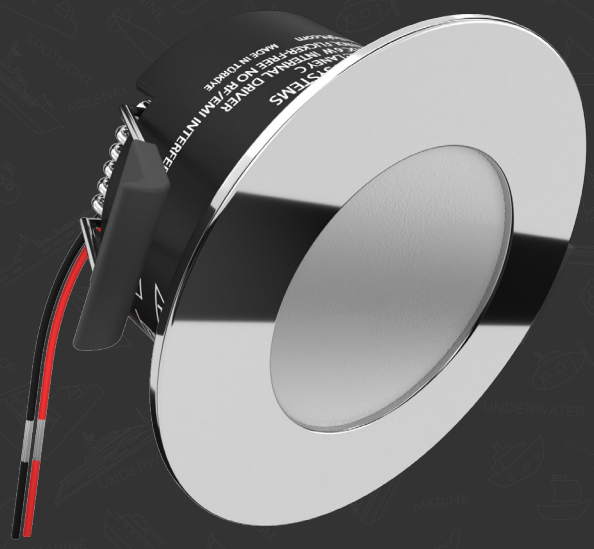

LANEY

MARINE GRADE DOWNLIGHT

Designed for Marine Electrical Instability

IP65 Front Rated | 80V Extended Tolerance | Zero EMI | Integrated Aluminum Driver

Thermal & High Voltage Protection | Custom Sizes & Finishes Available

STEIN TECHNOLOGY

Automatic Thermal Regulation With Adaptive Power Control

Efficient heat dissipation design minimizes overheating and reduces fire risk.

EMI-Free Operation

TECHNICAL SPECS

ELECTRICAL DATA

System Power	6 Watt
Nominal Operating Voltage	20–30V DC
Extended Voltage Tolerance	Up to 80V DC (temporary operation)
Energy Efficiency	Up to 98%
Dimming	PWM dimmable (compatible with 1–10V and DALI systems via suitable driver)

OPTICAL PERFORMANCE

Luminous Flux	720 lm
Luminous Efficacy	120 lm/W
Color Rendering Index (CRI)	≥90
Beam Angle	120°
Rated Lifetime	L70 lifetime >100,000h
Color Consistency	3-Step MacAdam Ellipse

PROTECTION & SAFETY

Reverse Polarity Protection	Full electronic protection
Surge Immunity	IEC transient protection compliant up to 200V (short-duration spikes)
Driver Construction	Fully integrated aluminum-housed driver (no external plastic box)
Linear Constant Current Driver	No Switching Frequency
Flicker	0% Flicker (No PWM / No High Frequency Modulation)
Ingress Protection Architecture	IP65 front exposure / IP64 ceiling cavity protection

THERMAL MANAGEMENT

Operating Ambient Temperature	-40°C to +60°C
Max Case Temperature	70°C
Adaptive Thermal Regulation	Continuous thermal monitoring with dynamic current adjustment
Confined-Space Thermal Stability	Stable operation in low-ventilation ceiling cavities.
Adaptive Overvoltage Thermal Regulation	Automatic current derating under extended voltage conditions

DIMENSIONS

These dimensions can be optionally changed

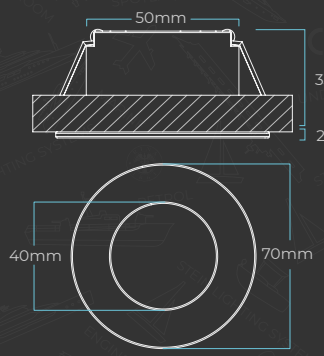

51-52mm

BEAM ANGLE

Optional

Honeycomb Anti-Glare Optic (~20% lumen reduction)

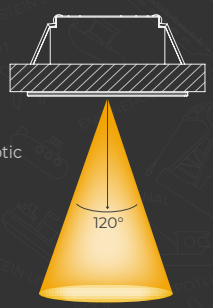

FINISHES

Polished Chrome | Polished Gold Plated | Black Painted | White Painted

LIGHT COLORS

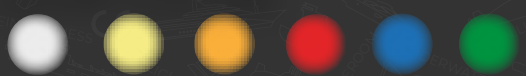

6500K | 4000K | 3000K | RED | BLUE | GREEN

IP65