STEIN
MARINE LIVING

# AMY 160

## MARINE GRADE DOWNLIGHT

Designed for Marine Electrical Instability

IP65 Front Rated | 80V Extended Tolerance | Zero EMI | Integrated Aluminum Driver

Thermal & High Voltage Protection | Custom Sizes & Finishes Available

## STEIN TECHNOLOGY

Automatic Thermal Regulation With Adaptive Power Control

Efficient heat dissipation design minimizes overheating and reduces fire risk.

EMI-Free Operation

## TECHNICAL SPECS

### ELECTRICAL DATA

| | |
|---|---|
| System Power | 12 Watt |
| Nominal Operating Voltage | 20–30V DC |
| Extended Voltage Tolerance | Up to 80V DC (temporary operation) |
| Energy Efficiency | Up to 98% |
| Dimming | PWM dimmable (compatible with 1–10V and DALI systems via suitable driver) |

### OPTICAL PERFORMANCE

| | |
|---|---|
| Luminous Flux | 1.440 lm |
| Luminous Efficacy | 120 lm/W |
| Color Rendering Index (CRI) | ≥90 |
| Beam Angle | 45° |
| Rated Lifetime | L70 lifetime >100,000h |
| Color Consistency | 3-Step MacAdam Ellipse |

### PROTECTION & SAFETY

| | |
|---|---|
| Reverse Polarity Protection | Full electronic protection |
| Surge Immunity | IEC transient protection compliant up to 200V (short-duration spikes) |
| Driver Construction | Fully integrated aluminum-housed driver (no external plastic box) |
| Linear Constant Current Driver | No Switching Frequency |
| Flicker | 0% Flicker (No PWM / No High Frequency Modulation) |
| Ingress Protection Architecture | IP65 front exposure / IP64 ceiling cavity protection |

### THERMAL MANAGEMENT

| | |
|---|---|
| Operating Ambient Temperature | -40°C to +60°C |
| Max Case Temperature | 70°C |
| Adaptive Thermal Regulation | Continuous thermal monitoring with dynamic current adjustment |
| Confined-Space Thermal Stability | Stable operation in low-ventilation ceiling cavities. |
| Adaptive Overvoltage Thermal Regulation | Automatic current derating under extended voltage conditions |

## DIMENSIONS

These dimensions can be optionally changed

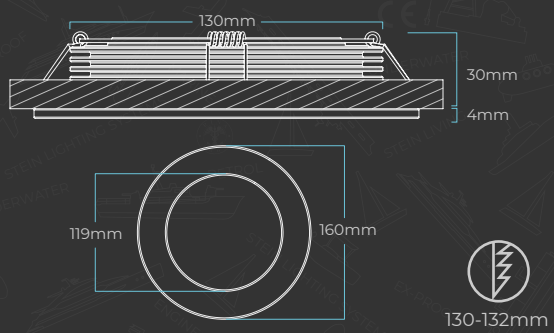


## BEAM ANGLE

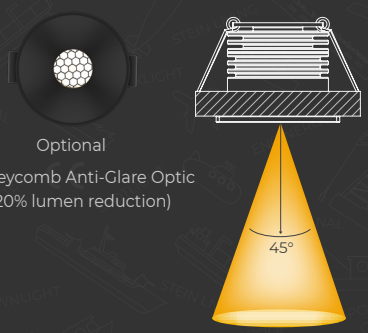


Optional

Honeycomb Anti-Glare Optic (~20% lumen reduction)

## FINISHES

Polished Chrome | Polished Gold Plated | Black Painted | White Painted

## LIGHT COLORS

6500K | 4000K | 3000K | RED | BLUE | GREEN

IP65